Adam Tas Corridor Energy

Fiber optic cable storage cabinet

Fiber optic cable storage cabinet

Weunion Fiber Distribution Cabinets: High-Capacity, IP65-Rated

3. Fiber Optic Cross-Connect Cabinets Designed for backbone-to-access network transitions, Weunion's cross-connect cabinets offer: High-Capacity Splitting: Models like WU-ODC

FTKS-1805-08A 8-Port Termination Box For Fiber Optic Cable To

General Description: The equipment is used as a termination point for the feeder cable to connect with drop cable in FTTx communication network system. The fiber splicing, splitting, distribution can be

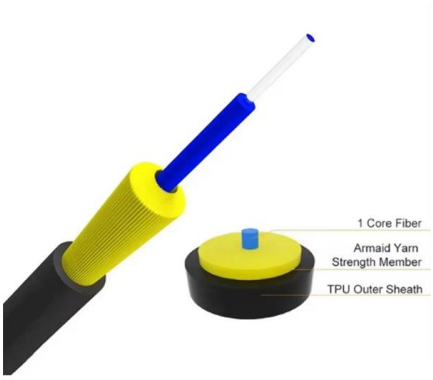

Frames, Racks & Hardware

CommScope offers a variety of easy-to-install frames, racks and cabinets specially engineered for network equipment and fiber cable management.

Fiber Optic Cabinets, Rack Mount & Distribution , Clearfield

Distribution Cabinets For Fiber Optic Distribution Incorporating Clearfield's philosophy of

modularity and flexibility, the FieldSmart ® Fiber Distribution Hub

Fiber Optic Enclosures , Leviton Network Solutions

Leviton manufactures a wide variety of fiber optic enclosures for all your project needs, including rack- and wall-mount, 1RU to 10RU, zero-U, high density, and application-specific models.

Fiber Optic Enclosures & Cabinets , Made in the USA

Dual-door security, top/bottom cable entry with tie-down slots, and aluminum construction deliver organized, secure splice and cable storage for telecom and

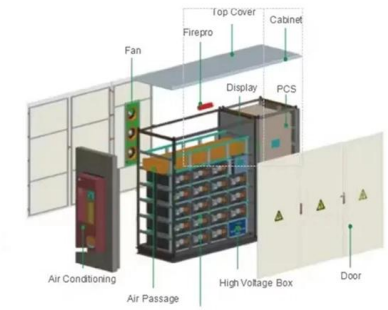

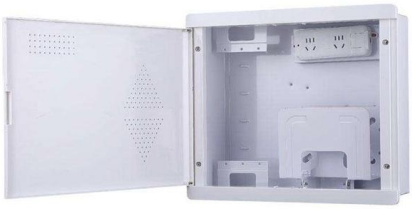

Fiber Optic Cabinet Manufacturer , OMC Fiber

Indoor Fiber Optic Cabinet- double doors Fiber Optic Cabinets: Revolutionizing Network Infrastructure with OMC Group As global data traffic skyrockets,

4M LC-SC Multimode Fiber Optic Cable 50/125 4-Strand

More from Ultra Spec Store Fiber Optic Adapter Cable ST (Female) to LC (Male) Singlemode (9/125) Duplex 1FT (YELLOW) $14.95

Robust Data Cabinets for Fiber and Network Equipment

Explore Foss's range of high-quality data cabinets designed for secure and efficient housing of fiber optic and network equipment. Engineered for structured cabling,

Fiber Cabinet Supplier,Fiber Optic Hub Box,Fiber Waterproof Box

Leading fiber cabinet supplier offering durable fiber optic hub boxes and waterproof enclosures. Customize your fiber distribution solutions with high-quality, reliable cabinets for optimal protection.

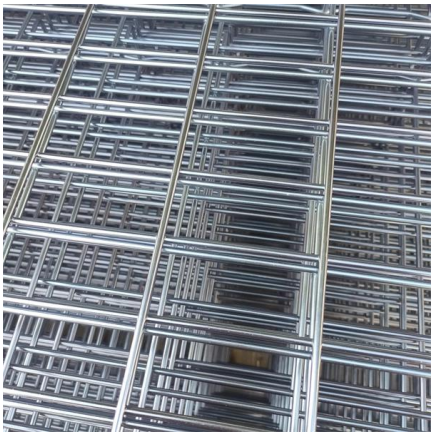

Fiber Optic Cabinets, Rack Mount & Distribution , Clearfield

Incorporating Clearfield's philosophy of modularity and flexibility, the FieldSmart ® Fiber Distribution Hub (FDH) sets the bar for fiber access, protection and density

Server Racks, Cabinets & Mounts , NavePoint

Shop server racks, wall mount cabinets & network enclosures from NavePoint. Free same-day shipping. Performance, Pro & Commercial Series. Est. 2008

What Is Fiber Optics? Definition from SearchNetworking

What is fiber optics? Fiber optics, or optical fiber, refers to the technology that transmits information as light pulses along a glass or plastic fiber.

Fiber Optic Enclosures - CableOrganizer

When choosing enclosures for your fiber optic networks, fiber optic enclosures are constructed to protect and organize delicate fiber optic cables, splices, and

Racks & Cabinets

Our unique cable and connectivity expertise is central to the design of this feature-rich Rack & Cabinet system, which offers ease of installation, easy MACs and

Fiber Optic Cabinets , Fiber Enclosures , Multilink

Manufacturers design fiber optic cabinets to protect fiber optic cables in indoor and outdoor environments. Also known as fiber optic enclosures or fiber entrance cabinets, these enclosures act

Fiber Optic Cabinet Manufacturer , OMC Fiber

A fiber optic cabinet serves as the organizational hub for all fiber optic connections. Inside this secure enclosure, multiple fiber optic cables come together, allowing

FTTx Enclosures & Indoor Racks

With thermal and ingress protection (IP) and offering physical security against vandals, our telecom street cabinets and 19" indoor telecom racks are designed

12-Core Jump Free Optical Fiber Splicing Tray SC Bundle Pigtail for

12-Core Jump Free Optical Fiber Splicing Tray SC Bundle Pigtail for ODF or Cable Cabinet

Fiber Optic Enclosures & Cabinets , Made in the USA

Fiber Optic Pole Mount Slack Storage Enclosure This all-metal pole-mount enclosure stores up to ~250? (144-count) of outdoor fiber slack. Powder-coated steel and

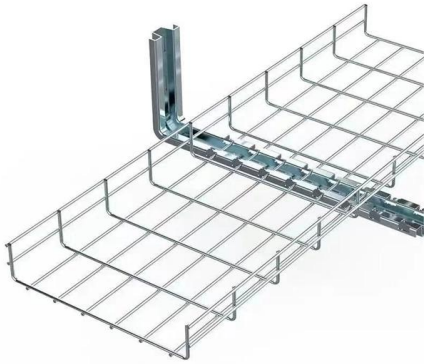

Cabinets

[Olabs Fiber Solutions - FiberFlex(TM)] Olabs' cabinet system is designed by combining the principles of simplicity and concepts of flexibility and scalability, yet

Outdoor Telecom Enclosures & NEMA Cabinets , AmProd

Fiber Optic Networks: From compact fiber distribution units to high-capacity data center enclosures like the AP-Data with six slack frames, our cabinets manage

Fiber Cable Management

Our Cable Shelves work great with our Hook and Loop Cable Ties. They save time when routing fiber optic cables around server components. Fiber Savvy supplies Hook and Loop Fiber Cable

Superior Essex 12 Strand Direct Burial Fiber

Superior Essex Loose tube 12 strand fiber optic cable should be your product of choice as the backbone in Outside Plant (OSP) environments. The rugged loose tube design offers reliable transmission

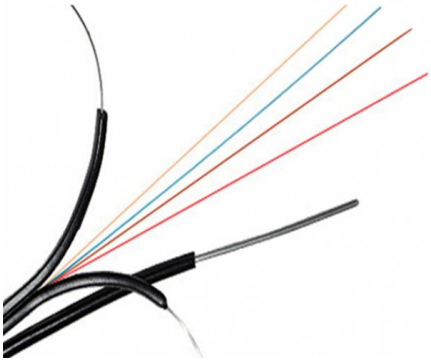

Foss FIBER RACKS AND CABINETS

Foss racks and cabinets are designed for durability, easy transportation, installation, scaling and management. These multi-purpose racks and cabinets comprises a lightweight aluminum frame with

Fiber Optic Cabinets Types Prices & Technical Specifications

A fiber optic cabinet is a protective enclosure used for termination, splicing, and distribution of fiber optic cables in FTTH, FTTB, or OSP networks. It safeguards connectors and adapters from dust, moisture,

Contact Us

For datasheets, pricing, or custom telecom energy solutions, please visit: https://www.koskolong.co.za