Adam Tas Corridor Energy

Specifications and dimensions of cable tray puncture gaskets

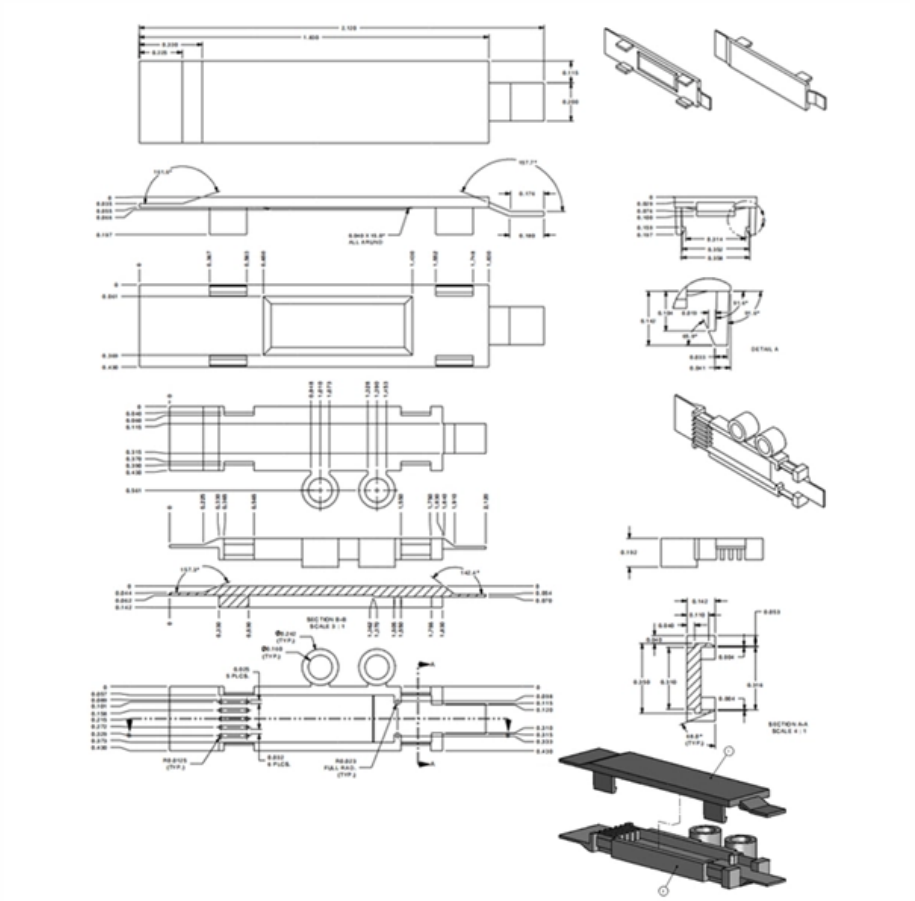

Specifications and dimensions of cable tray puncture gaskets

Technical Specification for Cable tray installation and cable laying work

1. Scope :- This specification covers the following major activities; - Fabrication and installation of Mild Steel (MS) support structure for Galvanized Iron (GI) Cable tray. - Installation of perforated GI Cable

Perforated GI Cable Tray Specifications

The document provides technical specifications for perforated galvanized iron (GI) cable trays with tray covers. It outlines 5 key sections: a description of

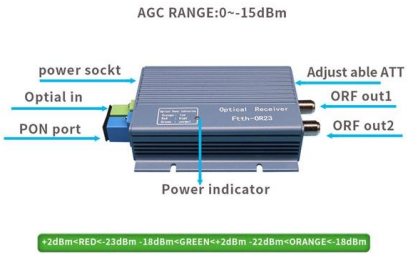

CABLE TRAY SYSTEM

CABLE TRAY ICMS cable tray system including Fittings and accessories is manufactured With return flange in a standard length of 2.44Mtr and 3 Mtr, according to the following Specifications and

Cable Tray Width, Dimensions and Specifications as per

Learn about cable tray width dimensions and specifications as per NEC standards. Understand

types, sizes, materials, and installation guidelines for safe and

Full cable tray systems specification document

B. Cable tray systems are defined to include, but are not limited to straight sections of [ladder type] [trough type] [solid bottom type] [channel type] cable trays, bends, tees, elbows, drop-outs, supports

Product Specifications: CABLE TRAY

FDG CABLE TRAY FDG Cable Tray is designed to continuously support cable systems including; Power, Data, and Audio Visual. A quick and easy system to install without the need for specialised

Cable Tray Technical Guide A practical guide to product selection and

In designing supports for a cable tray system, consideration should be given to the loads associated with future cable additions and any additional loading that may be applied to the cable tray system (e.g.,

Cable Tray Technical Guide A practical guide to product selection and

A practical guide to product selection and installation This guide for engineers and installers has been developed by ABB as a practical reference regarding cable tray characteristics, installation, and

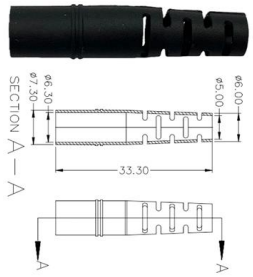

Eaton Cable Tray System Specifications

EATON__full-cable-tray-specification-document - Free download as PDF File (.pdf), Text File (.txt) or read online for free. This document outlines the specifications for

CABLE TRAY SYSTEMS GUIDE

CONCENTRATED STATIC LOADS: Some applications may require the cable tray to support the weight of a single, dead object in addition to the cable loads. Specifications typically require this to be

cable tray technical specifications

All light duty tray and accessories do not have a return edge. Also light duty tray of widths 150mm and un-der do not require the use of couplers as they have a swage joint. For sizes that do require a pair

Wire Mesh Cable Trays Technical Information Detailed,

Wire Mesh Cable Tray Detailed Information: a. A job site, field adaptable support system primarily for low voltage telecommunication and fiber optic cables. These

LEGRAND CABLE TRAYS TECHNICAL GUIDE

Not all cable trays are equivalent. The mechanical and electrical characteristics, tests, certifications, overall quality management, recommendations mentioned in this technical guide only apply to our

Crouse-Hinds series LCC Cable Tray Conduit Clamps catalog page

Applications: LCC cable tray conduit clamps are used for installation on cable tray side rails with inside flanges (requiring inside tray mounting) and outside flanges; LCCF clamps are for use exclusively on

cable tray(digital copy)

STANDARD RANGE OF PERFORATED TYPE CABLE TRAY Duty Width in mm Height in mm Thickness in mm Legnth in mm Lip in mm

FRP Cable Tray specifications External revision 1

4.07 Cable tray must have integral connection between side rails and rungs consisting of nonmetallic mechanical fasteners and adhesive bonding.

Cable tray manual

All the technical information developed by the 1973 NEC®Technical Subcommittee on Cable Tray for Article 318 - Cable Trays was based on cable trays with side rails and this technical information is still

SECTION 4 CABLE TRAY SYSTEMS

Unitrunk Cable Tray Systems consist of light, medium and heavy duty pattern with standard perforations. The requirements of a cable tray finish can vary, depending upon the situation, from being purely

Channel cable tray specification document

2.05 General: Except as otherwise indicated, provide ventilated metal channel cable trays, of types, classes and sizes indicated with splice connectors, fittings and all other necessary accessories for a

Cable Tray Specifications and Accessories

This document provides specifications for perforated and solid cable tray systems including: - Straight sections that come in various heights, bottom types, return

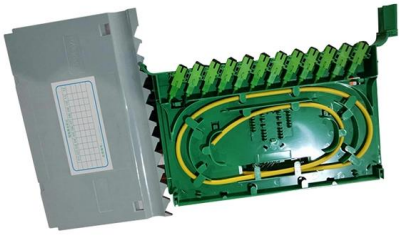

Cable Tray Specifications and Guidelines

This document provides general guidelines for cable trays and their installation. It discusses the different types of cable trays, including perforated

CABLE TRAYS

1. CABLE TRAYS (continued) Perforated base for easy installation: 9x25mm perforation for PVC screws M8 7x25mm perforation for metal screws M6

STANDARD SPECIFICATION E-30-11

The tray perforation (bed slot) shall be 20mm x 7.5mm clearance holes for cable fixing. The sides of trays shall be 180o return flanged for rigidity and minimizing damage to cable sheath and injury to

Cable Tray Specifications and Sizes

Cable Tray Specifications and Sizes The document specifies the requirements for different types of cable trays, including ladder and perforated cable trays. It

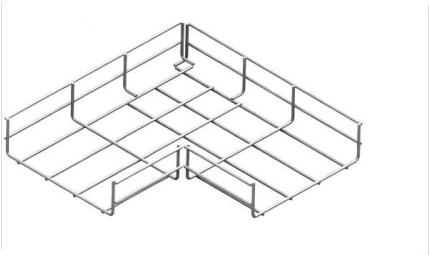

STANDARD PERFORATED CABLE TRAY

STANDARD PERFORATED CABLE TRAY Suitable for power and data cable routing in industrial, commercial, and infrastructure projects. Manufactured from high-quality GI, Hot Dip Galvanized,

P31

1. USE Perforated cable trays H75 male female automatic and male female to screw.

Perforated Cable Tray Specifications , PDF

This document describes perforated cable trays in three different styles - light, standard, and heavy duty. It provides details on the tray materials, dimensions,

Cable Tray Specifications and Sizes , PDF

The document describes specifications for different types of cable trays, including outside returned flanged cable trays in various standard sizes, light duty and

Contact Us

For datasheets, pricing, or custom telecom energy solutions, please visit: https://www.koskolong.co.za