Adam Tas Corridor Energy

Temporary power distribution box connection socket

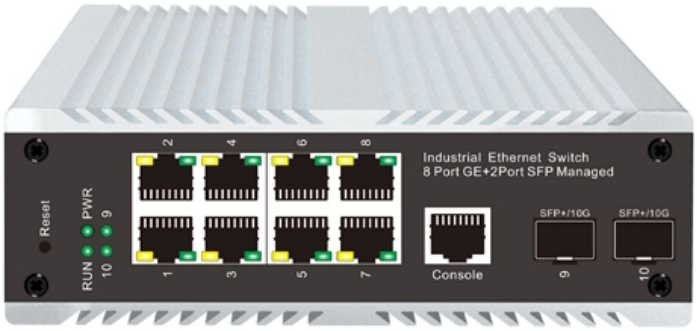

Overview

This article explains which connectors are actually used inside modern temporary power distribution boxes, how E-abel designs portable distribution enclosures around safety-first connector logic, and why industrial waterproof plug and socket systems—especially IP67. The multiple sockets are equipped with an input for direct connection to the in-line socket. Phase 3 manufacture the power distribution industry's highest quality power generator connectors. PREMIUM CONSTRUCTION POWER DISTRIBUTION BOX: Crafted by WESTERN, the 6506TLSX Temp power box features a durable blend material for long-lasting performance in demanding environments.

Temporary power distribution box connection socket

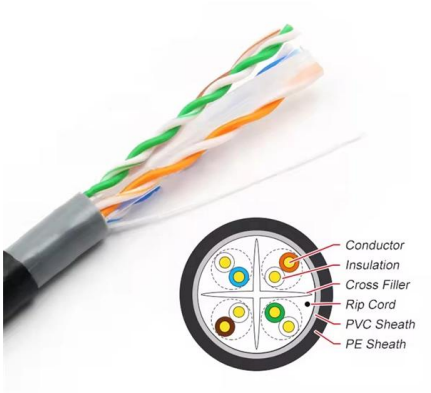

Portable power, distro, cables and adaptors for

Portable power distro, extension cables, adaptors, cable crossing for events, broadcast and other temporary applications.

Wonder Makers Portable Electrical Box Socket electric box32A220V

Buy Wonder Makers Portable Electrical Box Socket electric box32A220V Portable Temporary Distribution Box online today! Temporary power distribution boxes are a budget-friendly way to

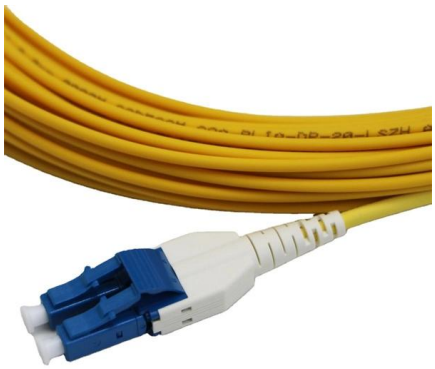

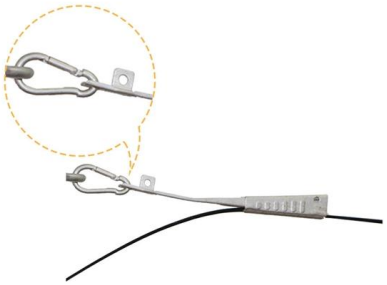

Temporary Power Distribution Boxes for Electrical

Temporary power distribution boxes for flexible electrical installation. Robust solutions for construction sites, events and temporary energy infrastructure.

Temporary Power

Power Distribution Box, NEMA 3R Enclosure, Sled Base. Includes: (1) 50 Amp, 125/250 Volt AC, Locking, California Style CS63 Power Inlet and

Feed Thru (1) 30 Amp, 250 Volt AC NEMA L6-30R

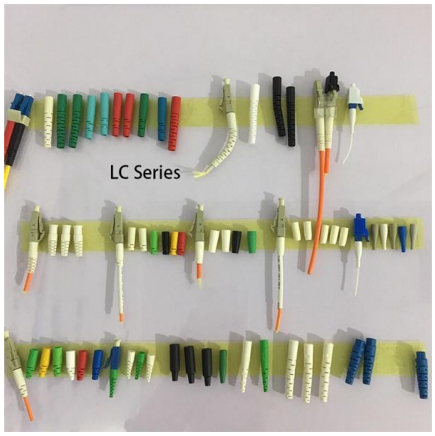

Temporary Power

Leviton has a wide range of temporary power solutions to give you the power you need, when and where you need it. Our devices are built to deliver safe and

Amazon : Temporary Power Box

Southwire Temporary Power X-Treme Box - 50A 125/250V Portable Power Distribution with 6 5-20 U-Ground/Straight Blade Receptacles - Rugged Steel Construction 50+ bought in past month Save

Temporary Power

Portable Electrical Outlet Boxes from Leviton are the perfect solution for creating OSHA and NEC Compliant portable power pendants and stringers for temporary

The Ultimate Guide to Temporary Power Distribution Boxes

Learn all about temporary power distribution boxes, their applications, advantages, and how to choose the right one for your needs.

100 Amp Metered Temporary Power Outlet Box

Why don't you have any 100 amp metered temporary power panels that have ringed meter sockets? The only ones you have are ringless, including this one. Can the

CAM Lock Connection Boxes

Camlock Connection Boxes Camlock connection boxes allow the quick connection from a generator to provide temporary power where it is needed. These camlock

Amazon : Power Distribution Box Portable

1-48 of over 2,000 results for "power distribution box portable" Results Check each product page for other buying options.

Amazon : Power Distribution Box Portable

Joinfworld Power Distribution Box,50A 125V/250V NEMA SS2-50 CS6375 Inlet, 30A Circuit Breaker, Individually Controllable Sockets, Heavy - Duty Waterproof Enclosure with Cooling Fan Recycled

100 Amp Metered Temporary Power Outlet Box

Product Details About This Product The Metered Temporary Power Outlet Box is factory-assembled and factory-tested. It comes to the construction job site ready

Distribution boxes

Multiple socket GSG is manufactured of impact-resistant material (rubber) to handle extra harsh environments. GARO's multiple socket for 1- and 3-phase operation. The multiple sockets are

Temporary Power Distribution Assemblies , Blakley

Blakley Electrics manufacture and supply from stock a comprehensive range of standard temporary power distribution assemblies.

brennenstuhl® , Licht

Hier sollte eine Beschreibung angezeigt werden, diese Seite lässt dies jedoch nicht zu.

Temporary Power Distribution Box

View reliable Temporary Power Distribution Box manufacturers on Made-in-China . This category presents mcb box, socket box, from China Temporary Power Distribution Box suppliers to global

Temporary Event Power Distribution , Blakley Electrics

A range of single and three-phase distribution assemblies for temporary event power supply and distribution and associated accessories.

Portable Power Distribution boards for temporary

The enclosure of a Titan Power has deep walls that protect sockets from accidentally being damaged by passing machinery. They can take a heavy impact, which

Temporary Distribution Board,Enclosures

The temporary distribution boards can be configured to your requirements, with both industrial and domestic plug sockets. Pre-configured options are available, as shown on this page.

Which Connectors Are Used in Temporary Power Distribution Boxes?

Explains how E-abel temporary power boxes pair with industrial waterproof plug and socket systems to deliver safe, fast, and reliable electricity on construction sites.

Amazon : Power Distribution Box

Power Distribution Box, Temporary Power Distribution Center, 50A California Standard Twist-to-Lock, Ideal for Temporary Power Needs Add to cart Joinfworld Power Distribution Box,50A 125V/250V

Distribution boxes , Ahlsell - We make it easier to be pr

Smaller portable connection panel with many 1-phase sockets, suitable for work on smaller building sites, refurbishment and extension work, etc. All sockets are protected by earth fault breakers of 30 mA.

Temporary Power Distribution and Industrial Lighting

Get reliable temporary power distribution and construction lighting solutions for your worksite needs with our portable power boxes, panels, and LED work lights.

Power Generator Connectors , Phase 3 Connectors

Phase 3 are proud manufacturers and suppliers of power generator connectors to temporary power distribution and utility companies worldwide. Our industrial plugs and sockets are perfect for

IP44 Temporary Power Distribution Electric Socket Box

Product Summary IP44 Temporary Power Distribution Electric Socket Box AC 400V Descriptions: UK series PC power maintenance box is in line with relative IEC

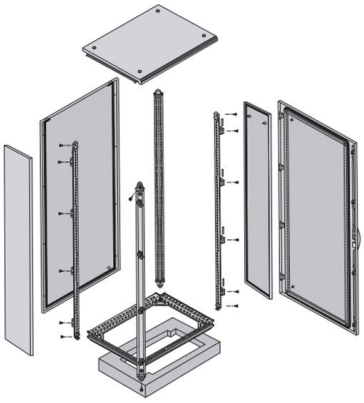

Waterproof Industrial Outlet Box Temporary Power

Yueqing Beigang Industrial Socket Distribution Box is an electrical distribution device that adopts a plug-in method, which is more convenient and practical than

Contact Us

For datasheets, pricing, or custom telecom energy solutions, please visit: https://www.koskolong.co.za